MITSUBISHI ELECTRIC
Changes for the Better

Air conditioning brilliance //

The Diamond Wall-mounted Unit

Advantages //

Excellent design

Personal choice of colour: Ruby Red, Natural White, Pearl White or Onyx Black

3D i-see sensor

Smart climate control with attendance detection in the room

Plasma Quad Plus

The integrated Plasma Quad Plus filter cleans the air of viruses and dirt

More flexibility

Single-split connectable to MUZ with R32 / Multi-split connectable to MXZ with R410A

MELCloud Wi-Fi adapter as standard

Control via smartphone or tablet, both at home and on the go

Poki-poki motor

Unique Mitsubishi Electric technology

Greater energy efficiency

Excellent SEER values of up to 10.5 / SCOP of up to 5.2

Excellent design //

Ruby Red stands for exclusive interior design and adds a fascinating dash of colour.

Excellent design //

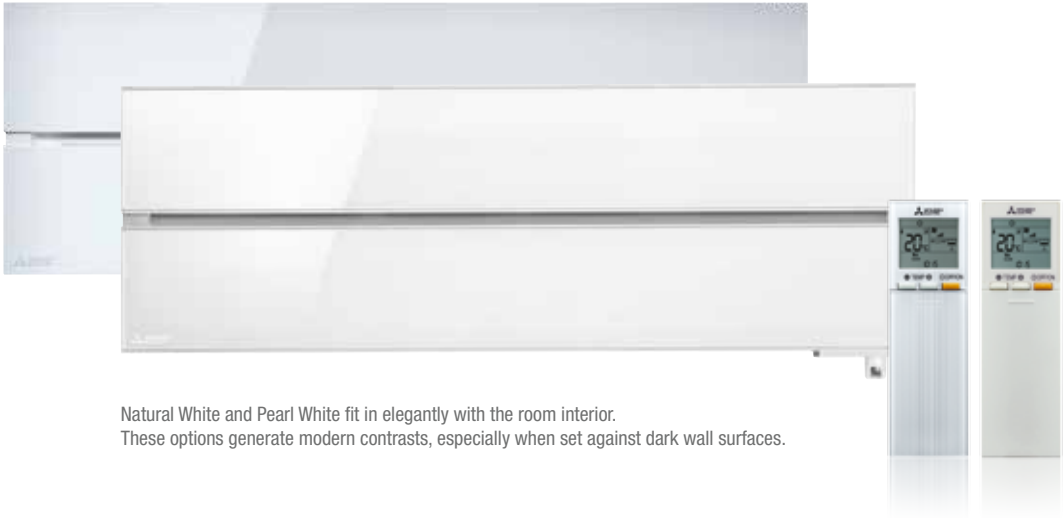

Natural White and Pearl White fit in elegantly with the room interior.
These options generate modern contrasts, especially when set against dark wall surfaces.

Excellent design //

Onyx Black is a clear style statement that sets the scene excellently.

Special painting technology on the housing surface lends the
Diamond wall-mounted unit a particularly deep colour and an elegant finish.

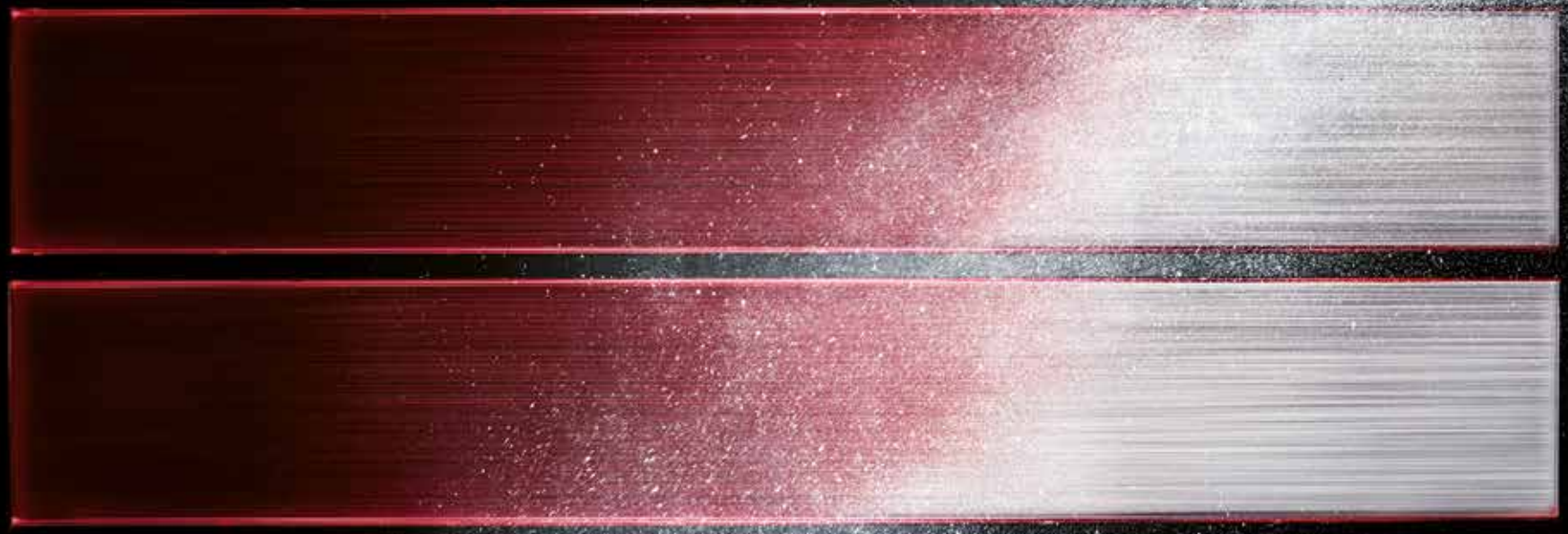

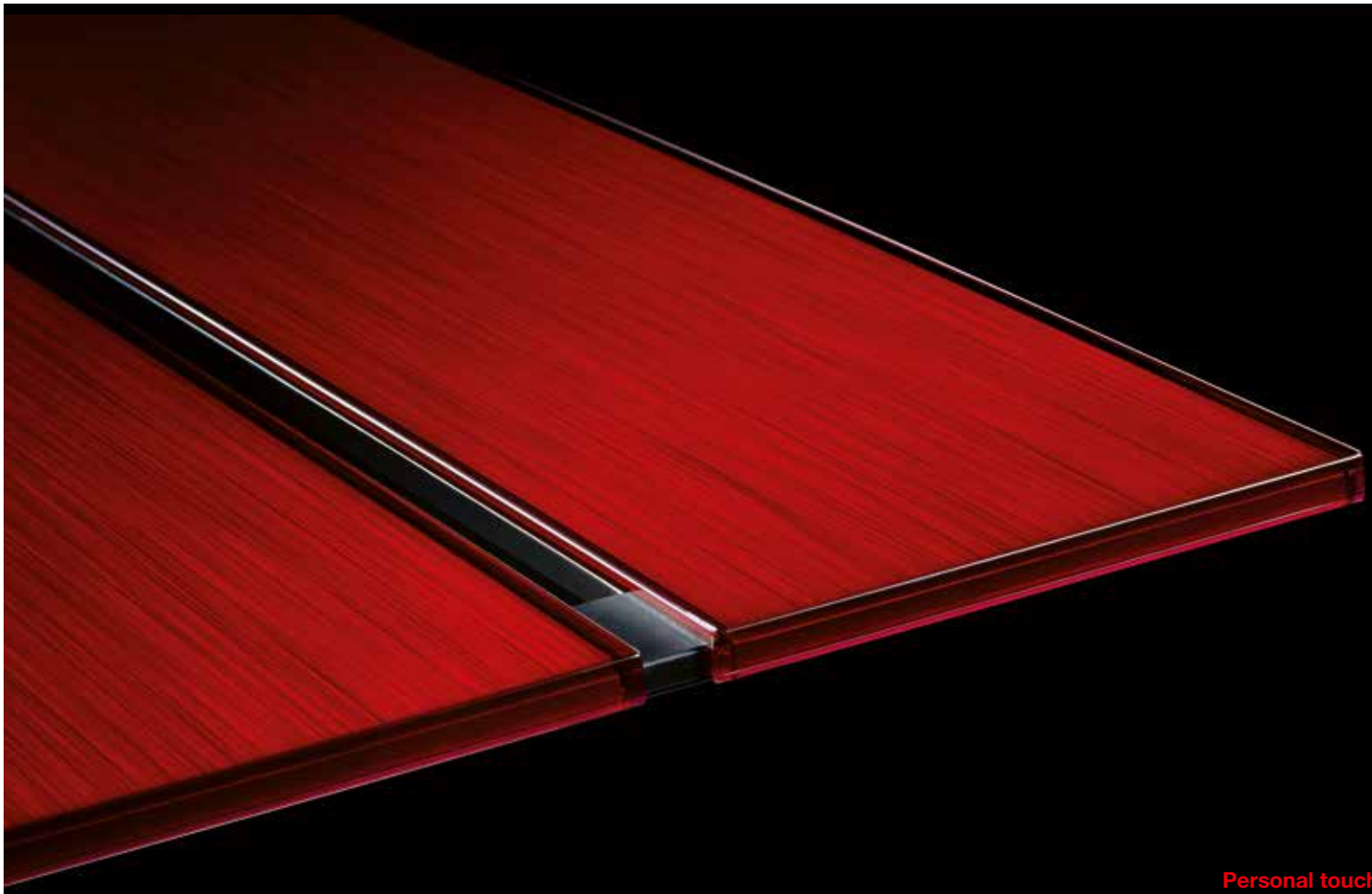

Excellent design //

Personal touch

Both in public areas and at home, high-quality material and a personal touch play an increasingly important role in modern interior design. The four colours in which the Diamond wall-mounted unit is available help make even sophisticated room concepts a reality while also enabling highly efficient and convenient air conditioning.

Ruby Red

Natural White

Pearl White

Onyx Black

Double flaps
Independently operating double flaps distribute pleasant airflows to individuals in the room. The airflow can be guided in various directions, cooling or heating the room air to ensure an outstanding level of comfort.

3D i-see sensor //

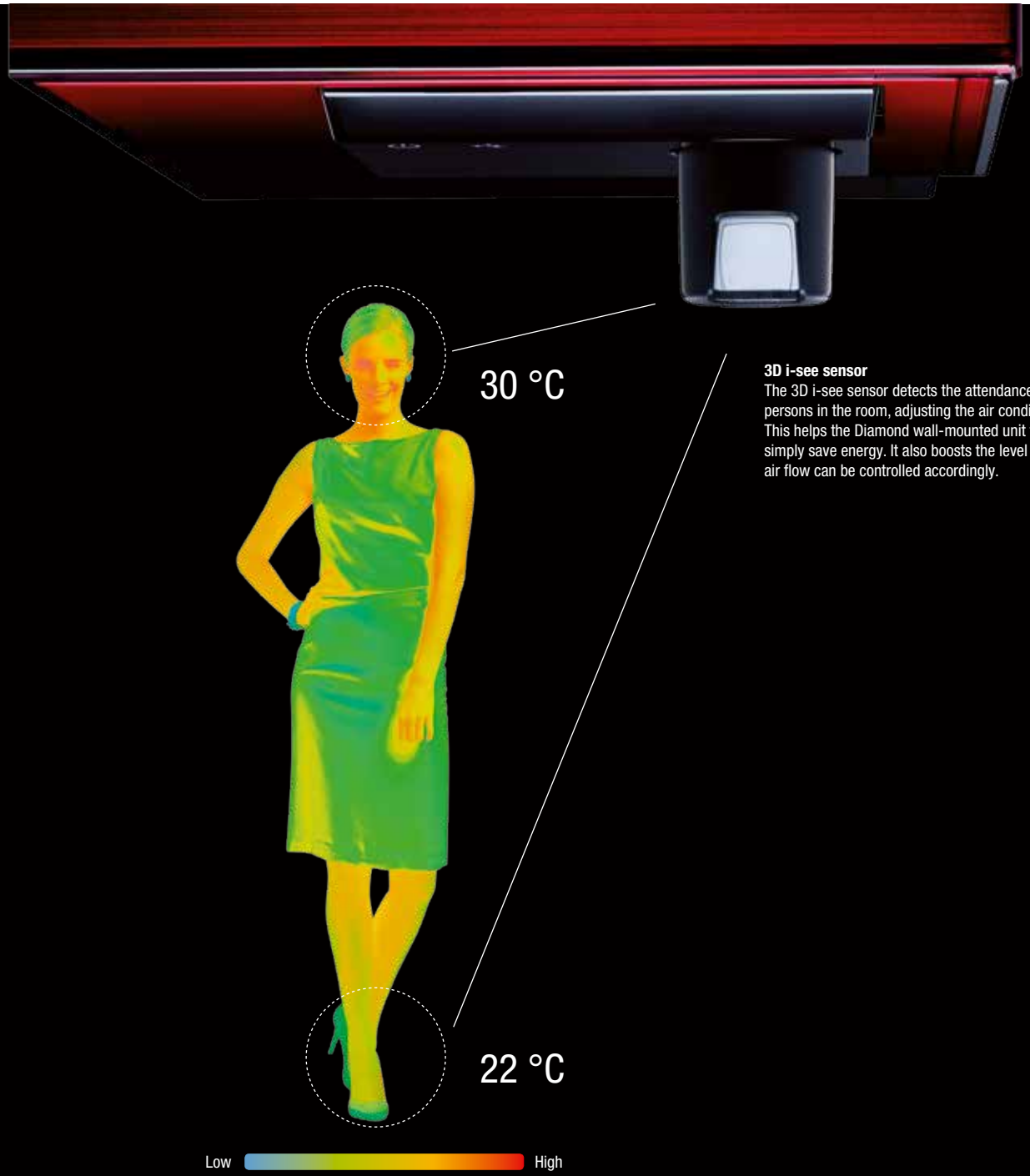

3D i-see sensor
The 3D i-see sensor detects the attendance and position of persons in the room, adjusting the air conditioning to match. This helps the Diamond wall-mounted unit to offer more than simply save energy. It also boosts the level of comfort, as the air flow can be controlled accordingly.

Plasma Quad Plus

The Plasma Quad Plus air purification system featuring high-performance plasma technology is used to filter the air, cleaning away even microscopically small particles. The patented Mitsubishi Electric coating prevents dust and dirt from accumulating on the filter.

Plasma Quad Plus //

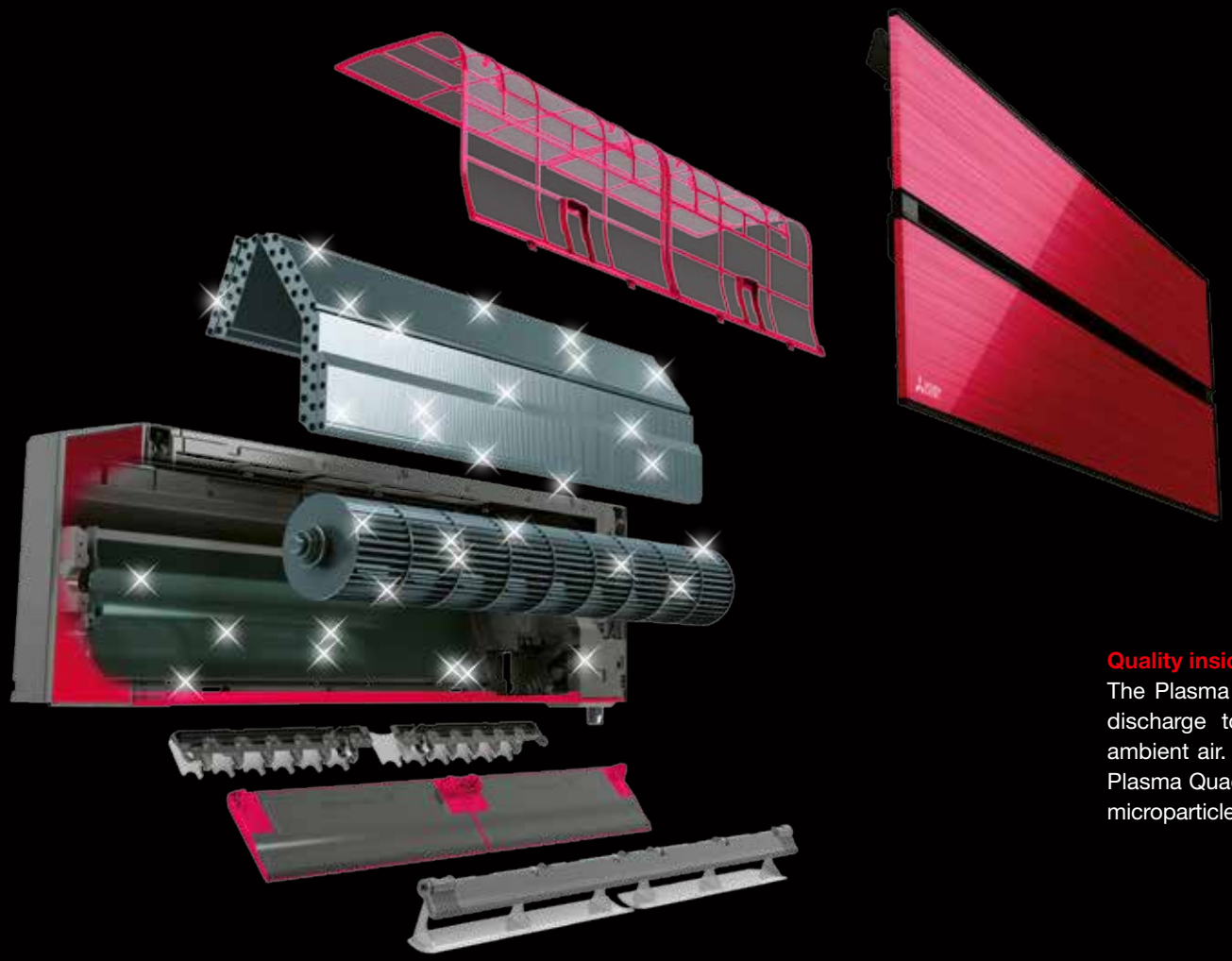

Quality inside and out

The Plasma Quad Plus filter works like an electrical curtain, using discharge to render harmless any bacteria and viruses in the ambient air. In addition to bacteria, viruses, allergens and dust, the Plasma Quad Plus filter is also very effective at removing moulds and microparticles.

It is designed to provide powerful heating, even on bitterly cold days.

Hyper Heating //

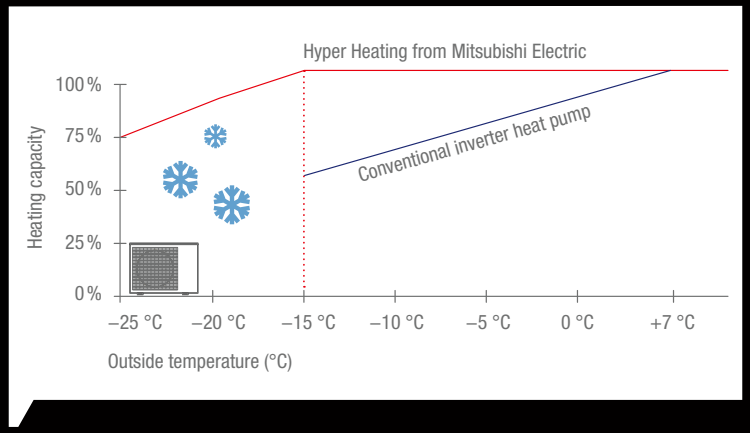

Hyper Heating technology

Hyper Heating technology has been specially developed by Mitsubishi Electric for very cold climate conditions. It improves the heating capacity of the system, making it possible to maintain 100 % of the heating capacity at ambient temperatures down to –15 °C and to ensure that heating is provided down to –25 °C.

Highlights

- 100 % of nominal heating capacity at ambient temperatures down to –15 °C
- Extended application range at ambient temperatures down to –25 °C
- High seasonal energy efficiency

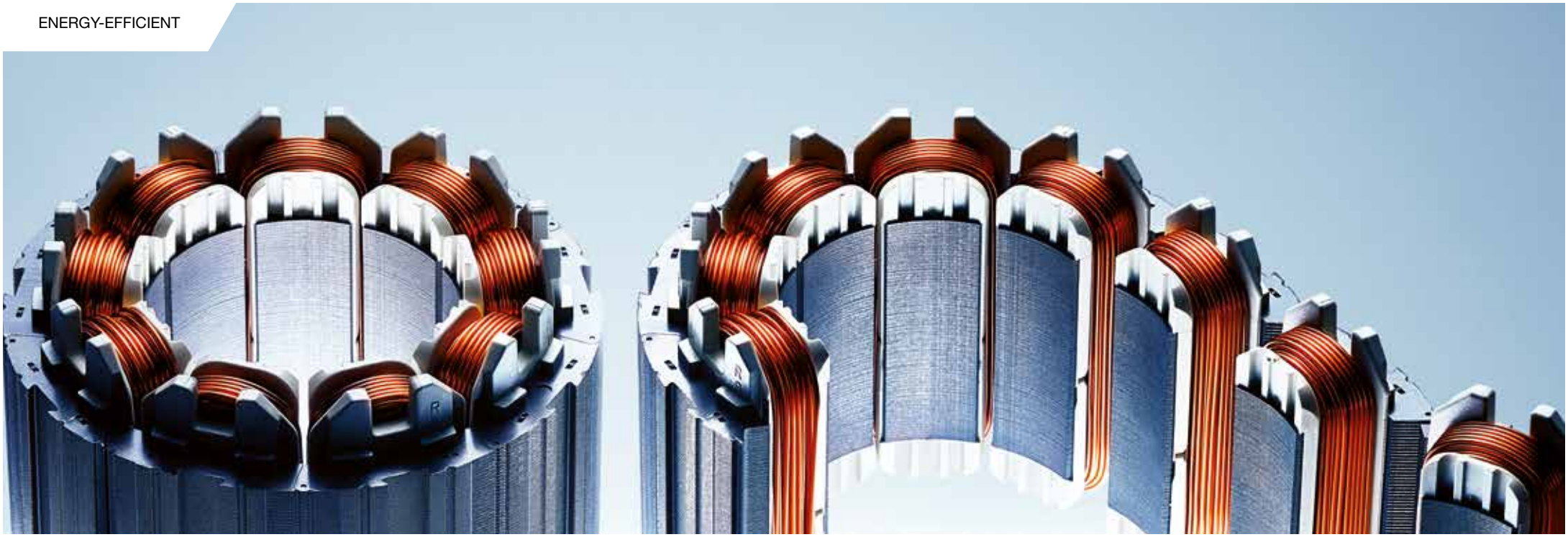

Compressor //

The compressor is the heart of the air conditioner.
It is built using extremely precise specifications.

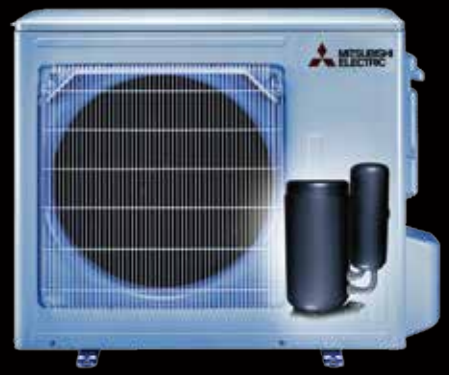

Poki-poki motor
Significantly enhanced motor efficiency thanks to dense winding technology.

Heat insulation with the heat caulking method
Mitsubishi Electric's heat caulking method for insulating the cylinder reduces friction losses, ensuring even greater efficiency.

MITSUBISHI ELECTRIC
28°C
Mon
CLOCK
10:15
TEMP
OFF/ON
MITSUBISHI ELECTRIC
28°C
Mon
CLOCK
10:15
TEMP
OFF/ON

Stylish remote controller //

Remote controllers

The many convenience features provided by the Diamond wall-mounted unit are extremely easy to control with the Diamond remote. All information is easy to read on the large display. The most important functions are identified with labelled buttons. The required temperature, the intensity and direction of the air flow, the timer and other automatic functions can be configured in the blink of an eye.

The Diamond remote controllers are included in delivery with the wall-mounted unit and in a suitable matching colour.

Highlights

- Unobtrusive design, flat shape for easy handling
- Easy-to-read display
- Weekly timer
- Matches the colour of the Diamond wall-mounted unit

MELCloud®

MELCloud
Home
A/C Living Room
Actions
Operation Mode
Fan Speed
Vane Horizontal
Vane Vertical
Temperature
Weather
Room Temperature
20°c
Set Temperature
20°c
Control
Reports
Support
Settings

Operation Mode
Temperature
Room Temperature
21°c
Set Temperature
20°c
Back

The air conditioning app //

MELCloud technology

The free MELCloud app enables convenient control of air conditioning systems via the internet – using a smartphone, tablet or PC. It provides access to all the intelligent functions of the air conditioning system, such as the weekly timer. The air conditioning system can also be monitored online and important status messages can be received via e-mail.

MELCloud enables effortless remote monitoring of multiple systems from a single device. The Wi-Fi adapter for using MELCloud is already integrated as standard. It guarantees a secure connection via the internet and communicates wirelessly with the router.

Highlights

- Remote monitoring and operation of systems
- Alarm function via e-mail
- Fault logging and recording
- Wireless connection via router
- Timer programming
- Energy consumption display (for single-split combinations)

MSZ-LN dimensions

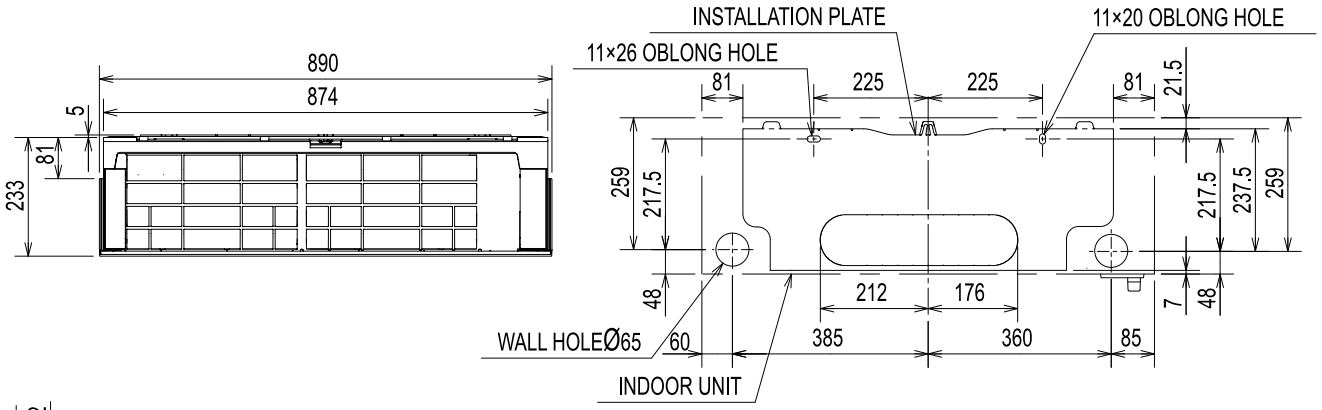

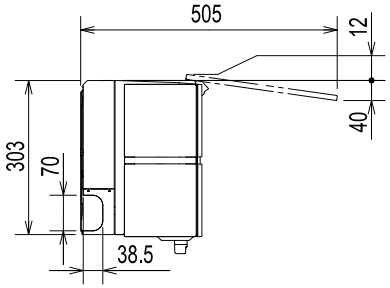

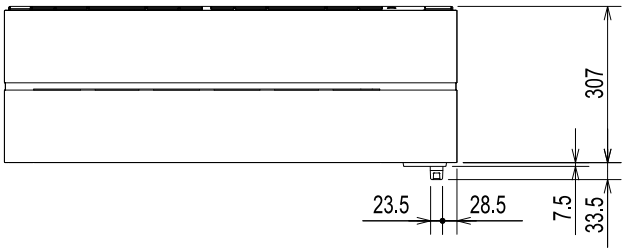

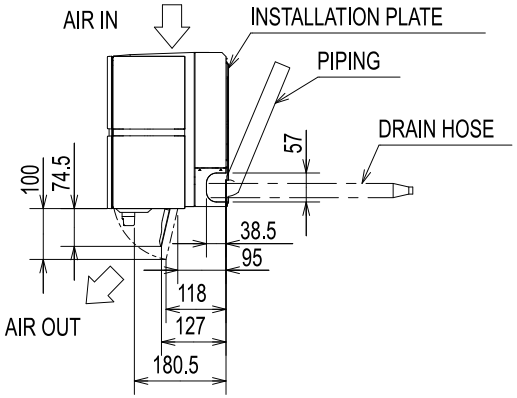

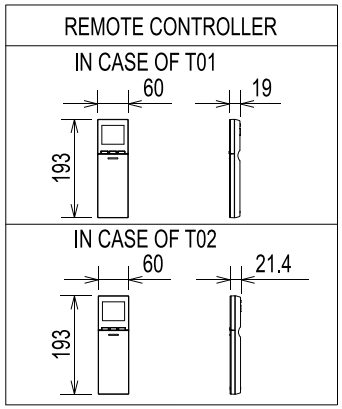

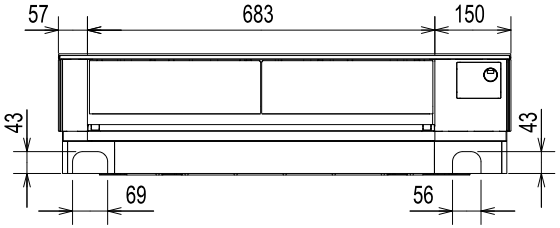

TECHNICAL DATA //

Ruby Red

Pearl White

Natural White

Onyx Black

R 32
Pre-charged

Indoor unit name			MSZ-LN25VG R/V/W/B*		MSZ-LN35VG R/V/W/B*		MSZ-LN50VG R/V/W/B*		MSZ-LN60VG R/V/W/B*
Outdoor unit name / Hyper Heating outdoor unit name			MUZ-LN25VG	MUZ-LN25VGHZ	MUZ-LN35VG	MUZ-LN35VGHZ	MUZ-LN50VG	MUZ-LN50VGHZ	MUZ-LN60VG
Cooling	Cooling capacity	(kW)	2.5 (1.0–3.5)	2.5 (0.8–3.5)	3.5 (0.8–4.0)	3.5 (0.8–4.0)	5.0 (1.0–6.0)	5.0 (1.4–5.8)	6.1 (1.4–6.9)
	Power consumption	(kW)	0.485	0.485	0.820	0.820	1.380	1.380	1.790
	SEER		10.5	10.5	9.5	9.4	8.5	7.6	7.5
	Energy Efficiency Class		A+++	A+++	A+++	A+++	A+++	A++	A++
	Application area	(°C)	–10 ~ +46	–10 ~ +46	–10 ~ +46	–10 ~ +46	–10 ~ +46	–10 ~ +46	–10 ~ +46
Heating	Heating capacity	(kW)	3.2 (0.8–5.4)	3.2 (1.0–6.3)	4.0 (1.0–6.3)	4.0 (1.0–6.6)	6.0 (1.0–8.2)	6.0 (1.8–8.7)	6.8 (1.8–9.3)
	Heating capacity at –10°C	(kW)	3.0	3.2	3.6	4.0	4.5	6.0	6.0
	Power consumption	(kW)	0.580	0.580	0.800	0.800	1.480	1.480	1.810
	SCOP		5.2	5.2	5.1	5.1	4.6	4.6	4.6
	Energy Efficiency Class		A+++	A+++	A+++	A+++	A++	A++	A++
	Application area	(°C)	–15 ~ +24	–25 ~ +24	–15 ~ +24	–25 ~ +24	–15 ~ +24	–25 ~ +24	–15 ~ +24

Indoor unit name		MSZ-LN25VG R/V/W/B*		MSZ-LN35VGR/V/W/B*		MSZ-LN50VG R/V/W/B*		MSZ-LN60VG R/V/W/B*
Air volume in cooling mode (m³/h)	L / H	258 / 528		258 / 528		342 / 636		426 / 762
Sound pressure level, cooling/heating (dB[A])**	L / H	19 / 36		19 / 36		27 / 39		29 / 45
Dimensions (mm)	W / D / H	890 / 233 / 307		890 / 233 / 307		890 / 233 / 307		890 / 233 / 307
Weight	(kg)	15.5		15.5		15.5		15.5
Outdoor unit names / Hyper Heating outdoor unit names		MUZ-LN25VG	MUZ-LN25VGHZ	MUZ-LN35VG	MUZ-LN35VGHZ	MUZ-LN50VG	MUZ-LN50VGHZ	MUZ-LN60VG
Sound pressure level, cooling / heating	(dB[A])	46 / 49	46 / 49	49 / 50	49 / 50	51 / 54	51 / 54	55 / 55
Dimensions (mm)	W / D / H	800 / 285 / 550	800 / 285 / 550	800 / 285 / 550	800 / 285 / 550	800 / 285 / 714	840 / 330 / 880	840 / 330 / 880
Weight	(kg)	35	35	35	36	40	55	55
Refrigerant type / refrigerant quantity (kg) / max. quantity (kg) /		R32 / 1 / 1.26	R32 / 1 / 1.26	R32 / 1 / 1.,26	R32 / 1 / 1.26	R32 / 1.25 / 1.51	R32 / 1.45 / 1.77	R32 / 1.45 / 1.77
GWP / CO_2 equivalent (t) / CO_2 equivalent max. (t)		675 / 0.68 / 0.85	675 / 0.68 / 0.85	675 / 0.68 / 0.85	675 / 0.68 / 0.85	675 / 0.84 / 1.02	675 / 0.98 / 1.20	675 / 0.98 / 1.20

* Colour designation in last letter of model name: R for Ruby Red, V for Pearl White, W for Natural White and B for Onyx Black.
** Sound pressure level for indoor unit measured 1 m in front of the unit and 0.8 m below the unit in cooling operation.

MITSUBISHI ELECTRIC
Changes for the Better

Mitsubishi Electric Europe B.V.
Living Environment Systems
Mitsubishi-Electric-Platz 1
40882 Ratingen
Germany
Phone +49 2102 486-0
Fax +49 2102 486-1120
www.mitsubishi-les.com

Our air conditioning equipment and heat pumps contain fluorinated greenhouse gases R410A, R407C, R134a, R32.
For further information please see the corresponding operation manual.

Art.-Nr. ENG-00007
Version 03 / 2017 / © Mitsubishi Electric Europe B.V.

for a greener tomorrow